FRIGA-BOHN®

CO_2LD TransLine

CO_2 Transcritical Racks

CO_2



MT **12** kW - **1** MW
LT **7** - **120** kW

PED 2014/68/UE

SAFETY UNIT

R290 unit directly triggered by CO2 pressure via an auto-reset pressure switch and must be connected to the store's back-up power supply.

OPTIONS

- R134a refrigerant.
- Auto check-up : Unit tested periodically to check its operation.

LIQUID STATION

Vertical liquid receiver with shut-off valves. **CUSTOMIZABLE**
Double safety shut-off valve with inverter switch.
Removable cartridge dryer with bypass valves.
Gas cooler pressure control valve connected upstream of the liquid receiver.
Liquid receiver pressure controlled by a flash-gas valve connected between the receiver and the HT rack suction line.
Fully insulated on liquid receiver, including a nylon platform on the base to avoid thermic transfer to the frame (condensation).
BPHE between LT and Liquid lines to ensure proper superheating of LT line, avoid liquid hammering on the compressor, and improve subcooling on liquid line.

OPTIONS

- Gas cooler pressure valve doubling.
- Liquid receiver pressure control doubling.

CONNECTION PACK

Connecting valve on the suction of each rack and the general liquid outlet. **CUSTOMIZABLE**

LIQUID STATION

Removable coalescing oil separator with oil level controller and oil return solenoid valve.
Oil receiver with high and low indicator and shut-off valves.
Return with filter and oil indicator.
Copper oil collector with flexible connection for each compressor.
Control system optimizes the oil receiver pressure and its deferential to the compressors.
Monitors the pressure in the oil receiver with low level alarm
Teklab or Emerson controller.

OPTIONS

- Oil separator bypass.

SENSORS, SAFETY COMPONENTS & MANIFOLD

All components assembled on the same board
Structure with antivibration pads
Easy to access and visualise



MANIFOLD | PIPING

Stainless steel piping as standard.
Thermal insulation of the entire refrigeration circuit (except for the discharge and oil lines).
Fully insulated valves (body and cap with Velcro).
A general filter unit on low temperature and high temperature rack suction.
Specific labels identifying the main lines.
Safety valve on:
  - low temperature rack suction headers.
  - high temperature rack suction headers.
  - high temperature rack delivery headers.

OPTIONS

- Double safety valve
- Discharge manifold collected to safety valves (copper or stainless steel connection)

ELECTRICAL CABINET

Factory mounted on antivibration pads.
Phase-voltage controller as standard (secure components during electrical oscillations / disturbances).
All the controllers (normal/back up) are connected to UPS system in case of electrical failure.
Available controllers: Carel, Danfoss & Dixel (Emerson).



CONTROL AND SAFETY DEVICES

Per compressor:
  - 1 HP pressure switch connected to the cylinder head with automatic reset.
  - INT safety thermistor box.
For a low temperature rack:
  - LP general safety pressure switch.
  - LP ratiometric pressure sensor (-1/34 B) for normal operation.
  - Variable frequency drive for the 1st compressor of - the low temperature rack.
For a high temperature rack:
  - HP general safety pressure switch.
  - LP general safety pressure switch.
  - HP ratiometric pressure sensor (-1/159 B) for normal operation.
  - LP ratiometric pressure sensor (-1/59 B) for normal operation.
  - Variable frequency drive for the 1st compressor of the high temperature rack, or CRII (Bitzer) allows a 10-100% capacity reduction.

PED FILE

Printed version (folder) delivered with the rack
Also available online (cloud)
All documents in the same folder (operating guide, user manual, spare parts list, certificates, etc.).

FRAME

Robust welded frame.
Validated by static and dynamic FEA studies.
Painted frame.
Designed for easy handling by forklift or crane (lifting rings as standard).

COMPRESSORS

Bitzer or Dorin semi-hermetic reciprocating compressors.
Multiple configurations available:
  - From 2 to 10 in MT.
  - Up to 16 compressors on one single rack.

OPTIONS

- LSPM compressors.

OPERATING PRESSURES

HP circuit	130 bar
Liquid receiver	60 bar
Liquid line	60 bar
MT rack suction	52 bar
LT rack suction	30 bar

Main applications: Small Supermarkets / Gas Stations
Application area: 100 to 500m2
Refrigeration capacity: 12-60 kW (Medium Temperature) / 7-20 kW (Low Temperature)
Compressors: 1 to 4 compressors



Compressors (Qty)					Dimensions			
LT	MT	IT	MT+IT	Total	L (mm)	W (mm)	H (mm)	Weight (kg)
0	2	0	2	2	1000	800	2000	1464
1	1	1	2	3	1000	800	2000	1517
1	2	0	2	3	1000	800	2000	1517
2	1	1	2	4	2500	800	2000	1720
2	2	0	2	4	2500	800	2000	1720

Dimensions

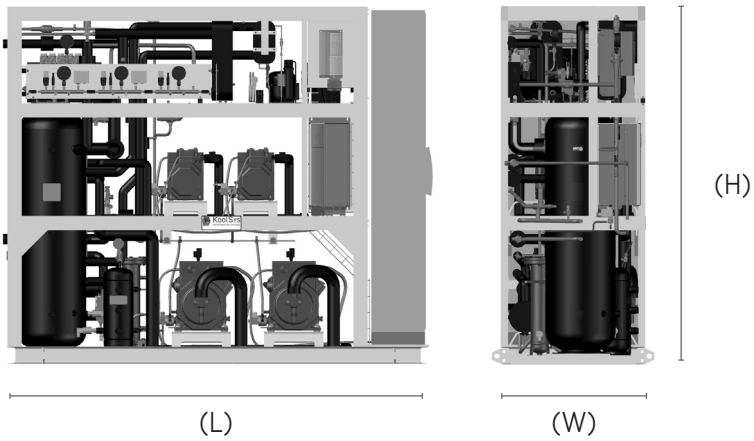

Main applications: Supermarkets
Application area: 800 to 1200m2
Refrigeration capacity: 60-140 kW (Medium Temperature) / 15-40 kW (Low Temperature)
Compressors: 5 to 7 compressors

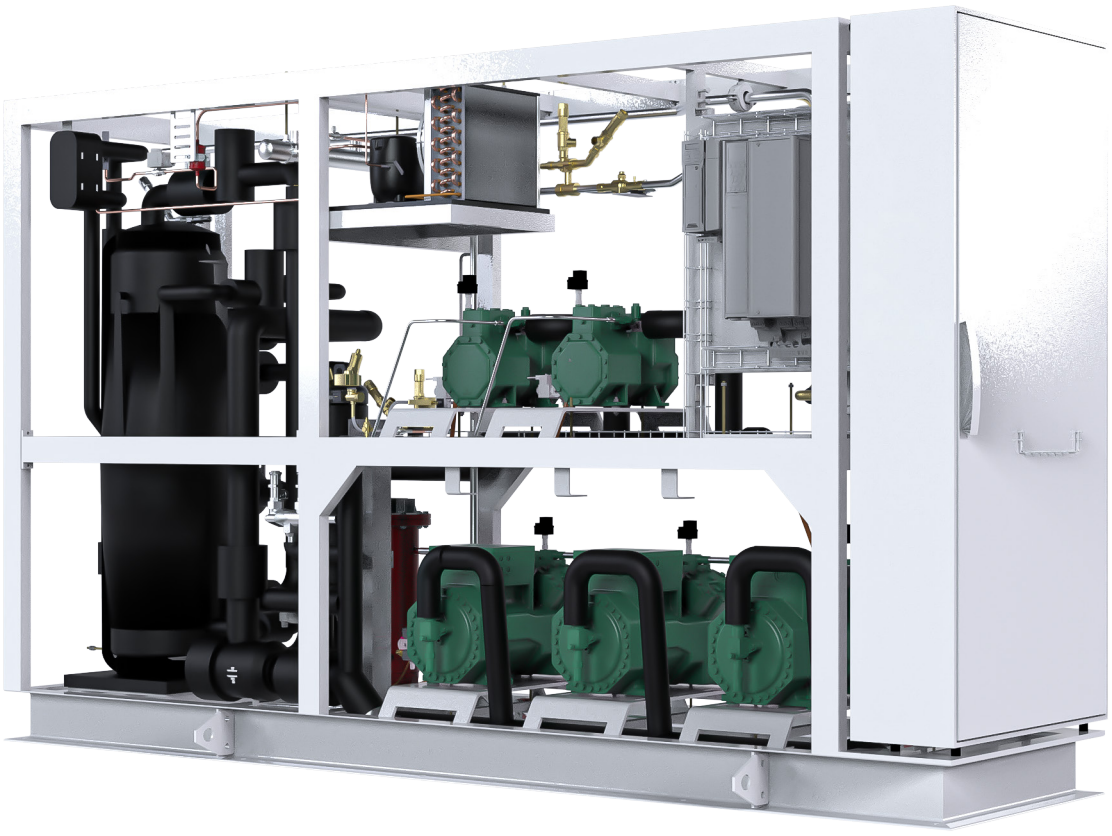

Compressors (Qty)					Dimensions			
LT	MT	IT	MT+IT	Total	L (mm)	W (mm)	H (mm)	Weight (kg)
0	3	0	3	3	4400	800	2000	2229
1	2	1	3	4	4400	800	2000	2306
1	3	0	3	4	4400	800	2000	2306
2	2	1	3	5	4400	800	2000	2384
2	3	0	3	5	4400	800	2000	2384
3	3	0	3	6	4400	800	2000	2461
2	2	2	4	6	4900	800	2000	2648
2	4	0	4	6	4900	800	2000	2648
3	3	1	4	7	4900	800	2000	2725
3	4	0	4	7	4900	800	2000	2725
3	2	0	0	5	3000	800	2000	2197
3	2	1	1	6	3000	800	2000	2461
3	3	0	0	6	3000	800	2000	2461
3	3	1	1	7	3500	800	2000	2725
3	4	0	0	7	3500	800	2000	2725

Dimensions

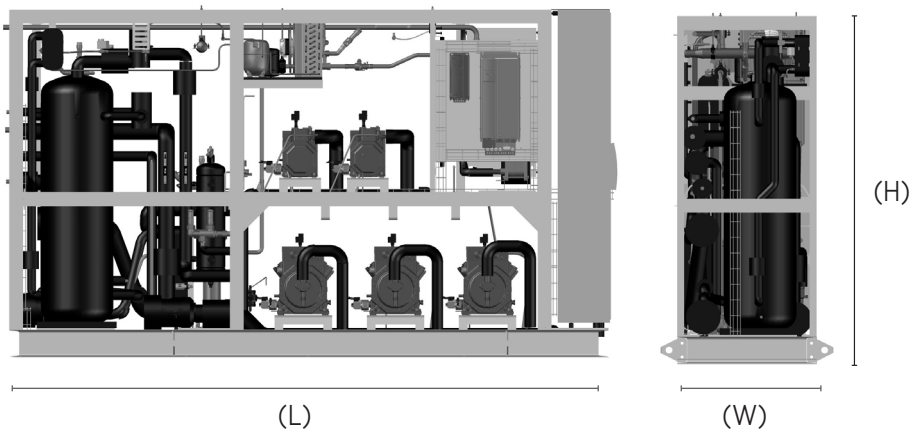

Main applications: Supermarkets / Industry
Application area: 1500 to 2000m2
Refrigeration capacity: 120-185 kW (Medium Temperature) / 15-80 kW (Low Temperature)
Compressors: 6 to 9 compressors

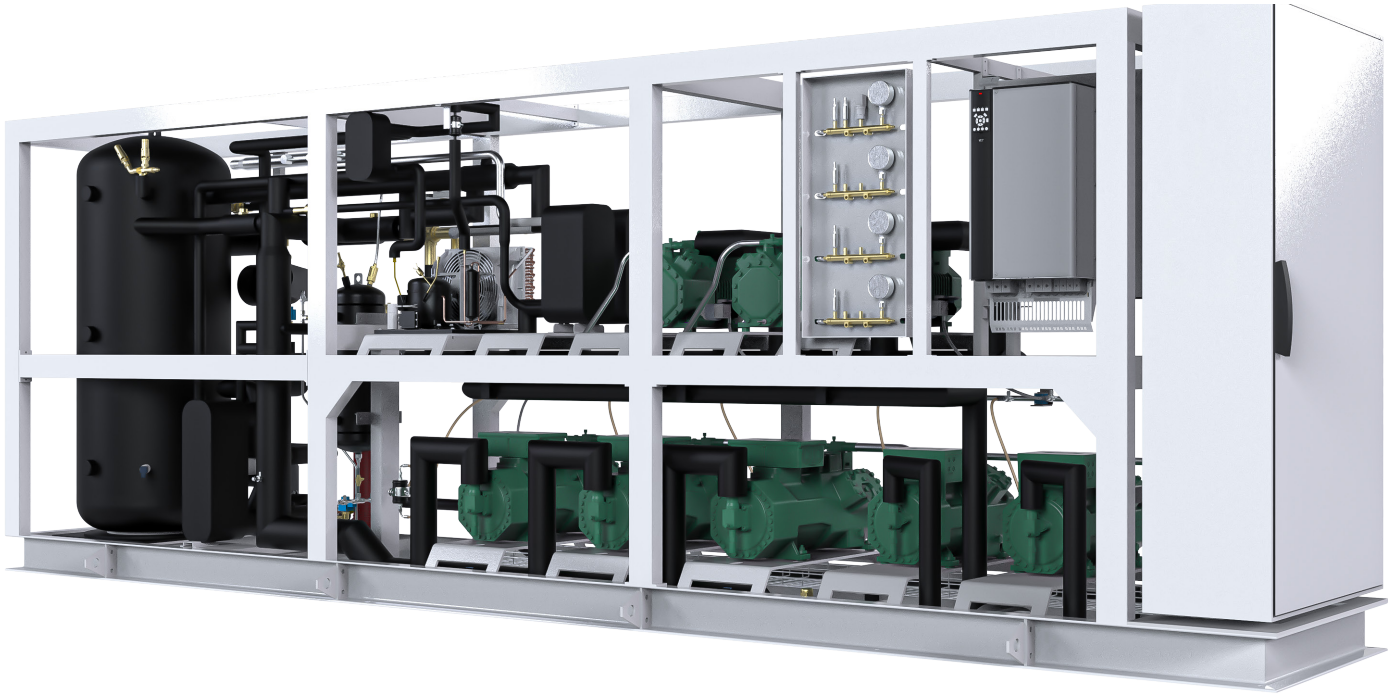

Compressors (Qty)					Dimensions			
LT	MT	IT	MT+IT	Total	L (mm)	W (mm)	H (mm)	Weight (kg)
0	3	2	5	5	5700	900	2000	4918
0	4	1	5	5	5700	900	2000	4918
0	5	0	5	5	5700	900	2000	4918
1	3	2	5	6	5700	900	2000	5023
1	4	1	5	6	5700	900	2000	5023
1	5	0	5	6	5700	900	2000	5023
2	4	1	5	7	5700	900	2000	5129
2	3	3	6	8	6300	900	2000	5390
2	4	2	6	8	6300	900	2000	5390
3	3	3	6	9	6300	900	2000	5496
3	4	2	6	9	6300	900	2000	5496

Dimensions

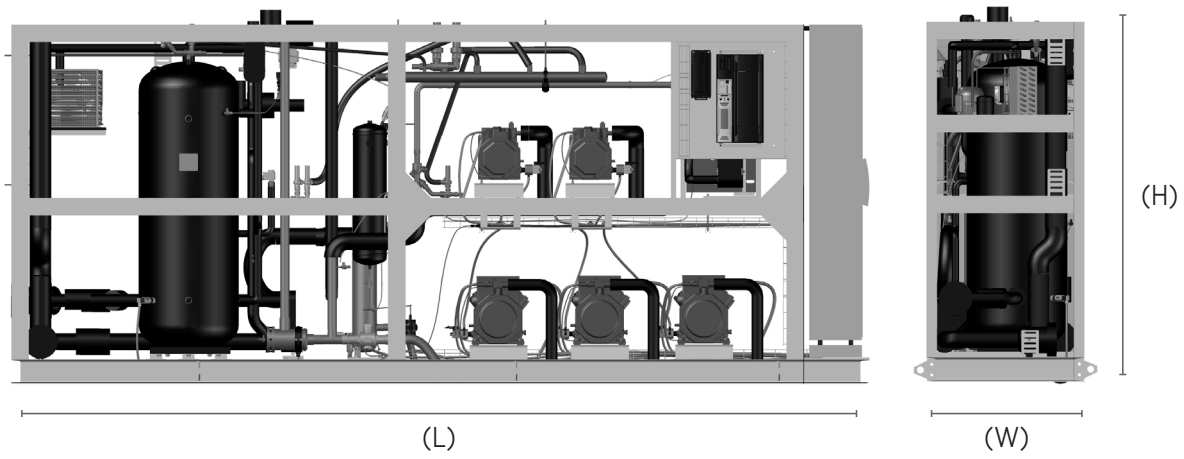

Main applications: Hypermarkets / Industry
Application area: 3000m2
Refrigeration capacity: 185 kW-1 MW (Medium Temperature) / 15-120 kW (Low Temperature)
Compressors: 8 to 16 compressors

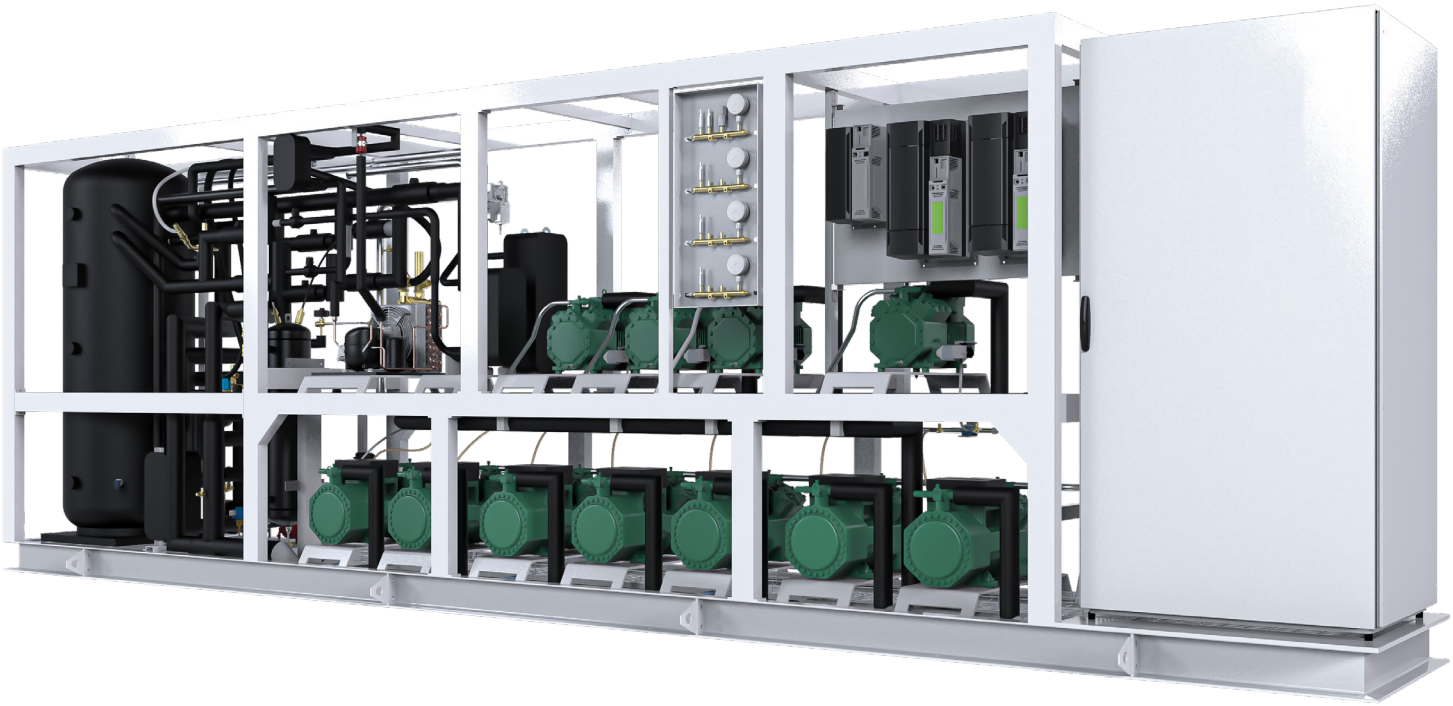

Compressors (Qty)					Dimensions			
LT	MT	IT	MT+IT	Total	L (mm)	W (mm)	H (mm)	Weight (kg)
0	4	3	7	7	7200	1000	2400	5439
0	5	2	7	7	7300	1000	2400	5439
0	5	3	8	8	7600	1000	2400	5699
1	4	3	7	8	7300	1000	2400	5545
1	5	2	7	8	7300	1000	2400	5545
1	5	3	8	9	7600	1000	2400	5805
1	5	4	9	10	8000	1000	2400	6066
2	4	3	7	9	7300	1000	2400	5650
2	4	4	8	10	7600	1000	2400	5911
2	5	1	6	8	6800	1000	2400	5390
2	5	2	7	9	7300	1000	2400	5650
2	5	3	8	10	7600	1000	2400	5911
2	5	4	9	11	8000	1000	2400	6172
3	4	3	7	10	7300	1000	2400	5756
3	4	4	8	11	7600	1000	2400	6017
3	5	1	6	9	6800	1000	2400	5496
3	5	2	7	10	7300	1000	2400	5756
3	5	3	8	11	7600	1000	2400	6017
3	5	4	9	12	8000	1000	2400	6277

Dimensions

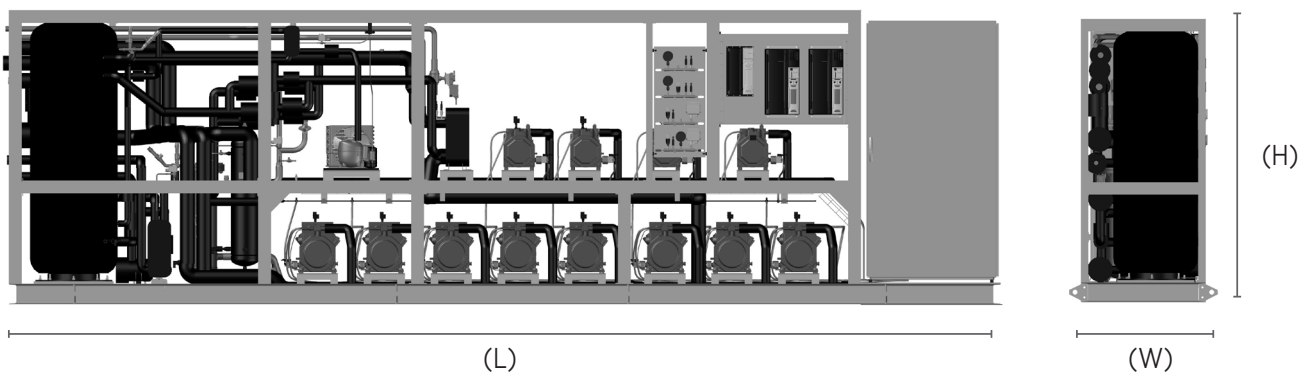

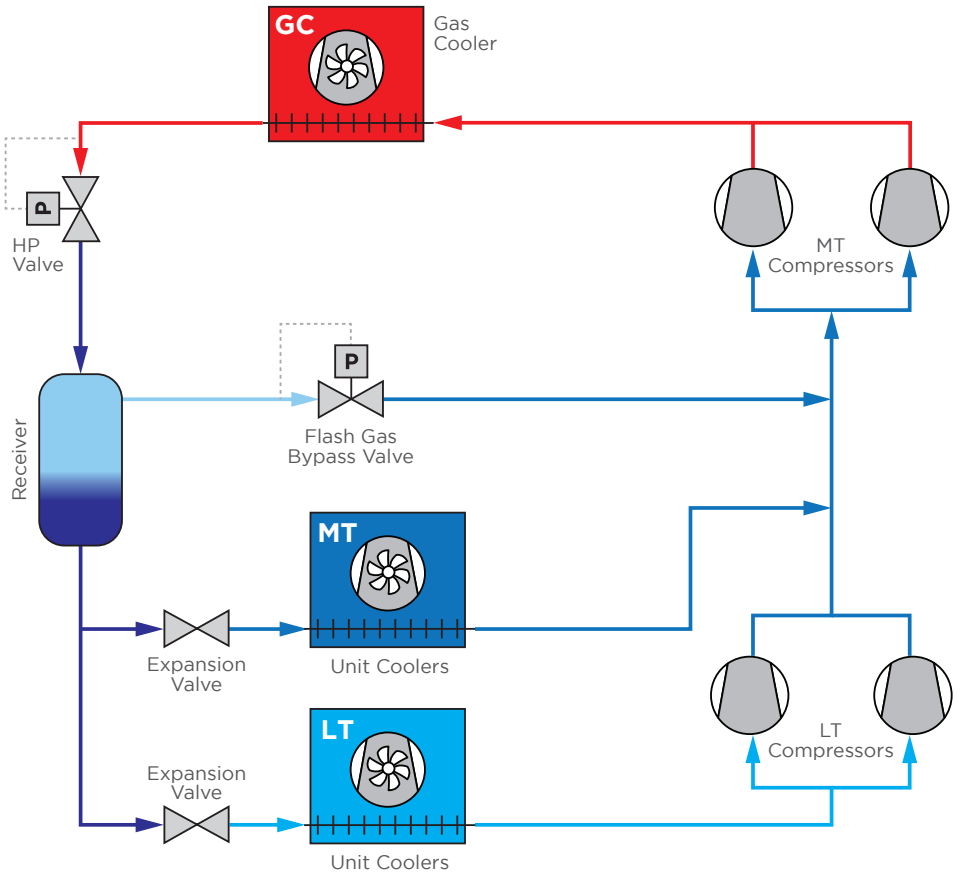

BOOSTER SYSTEM

Standard CO2 Transcritical system, with two stages of compression.

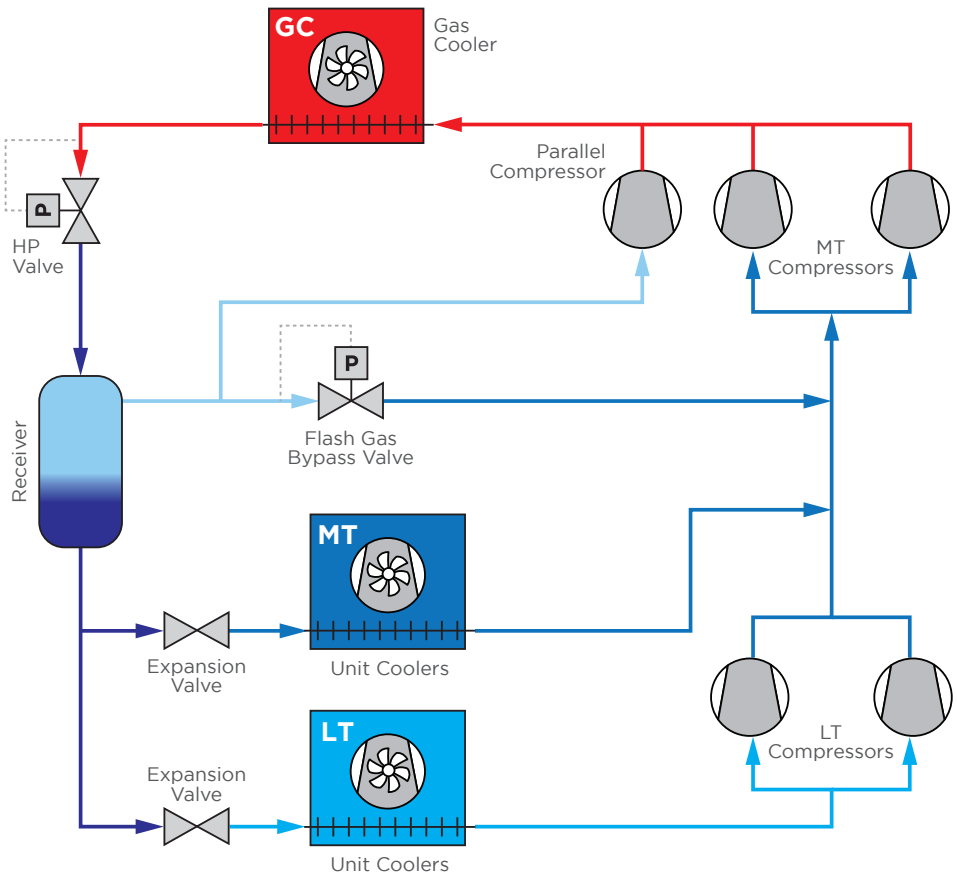

PARALLEL COMPRESSION

Optional compressor at the flash gas suction line, reduces MT overall compression work.
Recommended in warmer climates for better system performance.

Parallel Compression System can save 5 to 8% more energy*

* When compared to standard CO2 booster system (savings related to different external conditions).

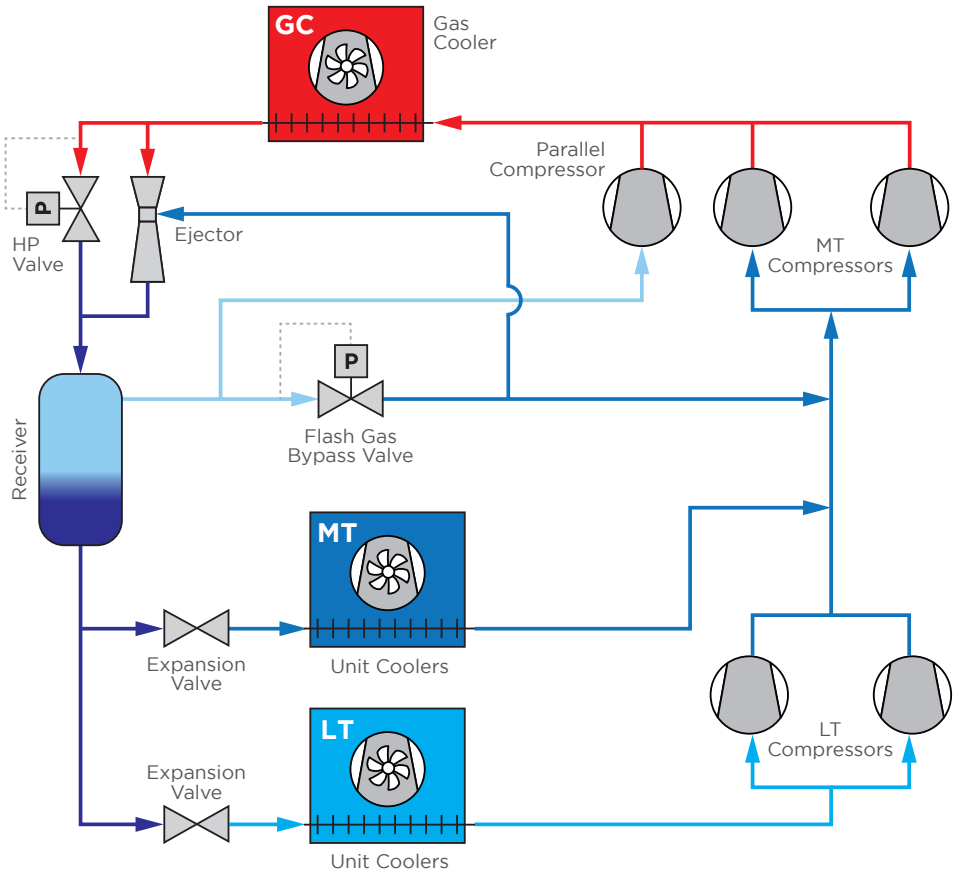

PARALLEL COMPRESSION WITH EJECTOR

Medium temperature CO2 from LT compressor discharge line is lifted by ejector to receiver pressure, further reducing overall MT compression work.
Recommended in warmer climates for better system performance.

Parallel Compression with Ejector can save 6 to 17% more energy*

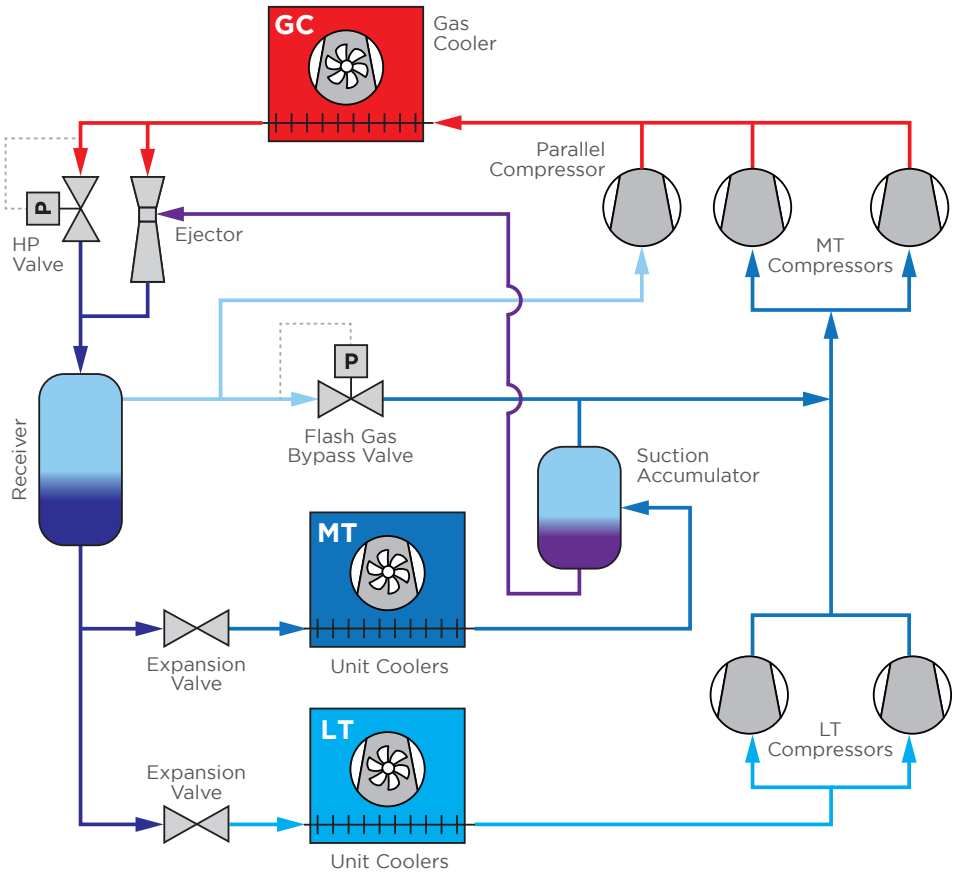

LIQUID EJECTOR

Designed for both booster and parallel compression systems, It is recommended for all climate types and stores with a cooling capacity between 40 and 300kW.
Similar to Gas Ejector, the Liquid Ejector is optimized to lift liquid from the suction accumulator, returning it to the receiver.
The evaporators operate with a very low superheat and a fraction of liquid is returned to the suction accumulator.
With the support of a specific controller, the evaporator operates more efficiently at a higher suction pressure. This enables the suction pressure to be raised, thereby reducing the energy consumption on the compressors.

Booster System with Liquid Ejector can save 10% more energy*

Parallel Compression with Liquid Ejector can save 15 to 18% more energy*

HP Ejector with Liquid Ejector can save 17 to 29% more energy*







OUTDOOR MACHINE ROOM WALK-360

360° accessibility around the equipment
Easier and faster maintenance: no disassembly required to access components
Improved comfort and safety during service operations
Enclosure for outdoor installation made of sandwich panels
Turnkey solution ready to install, integrating the unit and the electrical cabinet
Acoustic insulation for reduced noise levels

3 YEARS WARRANTY

Applied on the rack sold on a packaged sales configuration (rack, electrical panel, gas cooler & unit coolers)



FULL PACKAGE